aquabrass

serie 4600 (4611)

6" wallmount paper holder

FEATURES

Solid brass construction
6" wallmount paper holder

FINISHES

Standard
polished chrome (pc)
brushed nickel (bn)
Custom
19 custom finishes available
(ask your local Aquabrass authorized dealer for details)

WARRANTY

Residential: Limited lifetime warranty to original purchaser
Commercial: Two years warranty
(Complete warranty available at www.aquabrass.com/warranty)

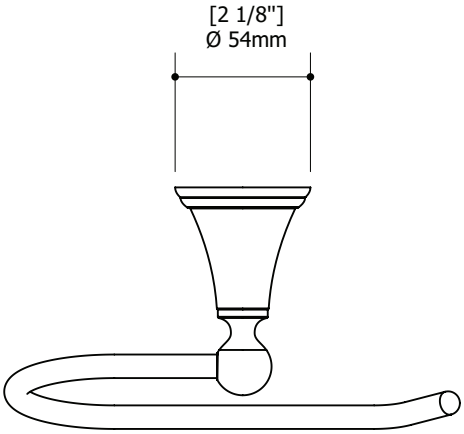

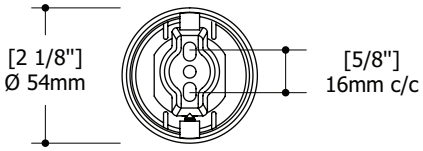

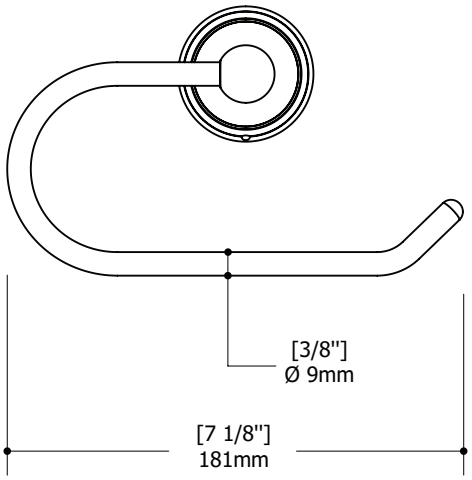

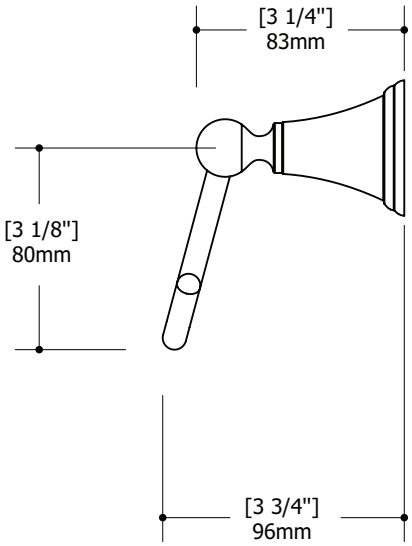

Products and specifications shown are subject to change without notice. Please contact our technical support at tech@aquabrass.com for any further queries, replacement parts requests etc.