aquakit U-22-005

Specifications

AQUABRASS

DEMI-TOTEM 12123

1/2" thermostatic valve with 2-way or 3-way diverter - CALGreen

FEATURES

High performance 1/2" thermostatic valve
European made solid brass rough and thermo cartridge
Safety temperature limit stopper, preset at 38C / 100F
Reversible service check valves with filters / stop valves
1/2" NPT female connection (outlet/inlet)
Diverter cartridge not included
Available a third outlet if required

Flow rate: 12gpm at 45psi

WARRANTY

Residential: Limited lifetime warranty to original purchaser
Commercial: Two years warranty
(Complete warranty available at www.aquabrass.com/warranty)

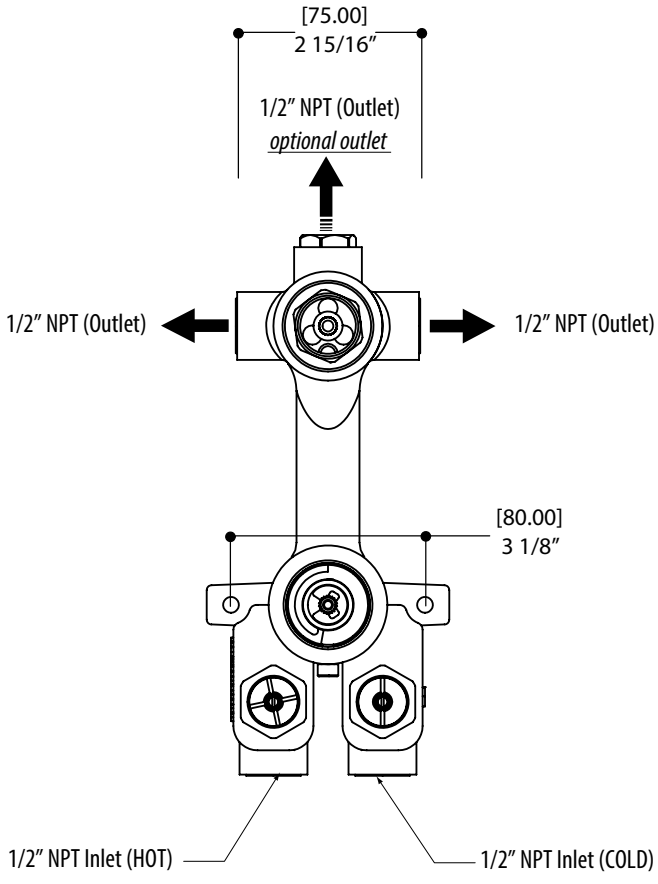

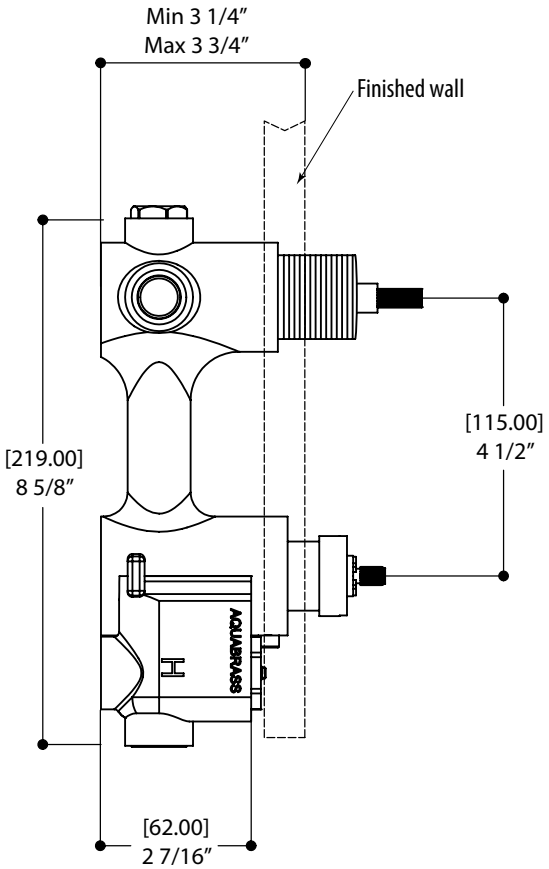

Products and specifications shown are subject to change without notice. Please contact our technical support at tech@aquabrass.com for any further queries, replacement parts requests etc.

AQUABRASS

trim R8295 2-way shared functions
R9295 2-way 1 function at a time
R8395 3-way shared functions
R9395 3-way 1 function at a time

round

FEATURES

Solid brass construction
Screwless decorative trim
Thin contemporary style - 4 1/4" x 12" x 1/8"
Decorative cylinders (x2) for shut-off valve and thermo control
Diverter cartridge included
Handles (x2)
Fits 1/2" thermo valve 12123

FINISHES

Standard
Polished chrome (pc)
Brushed nickel (bn)
Custom
15 custom finishes available
(ask your local Aquabrass authorized dealer for details)

WARRANTY

Residential: Limited lifetime warranty to original purchaser
Commercial: Two years warranty
(Complete warranty available at www.aquabrass.com/warranty)

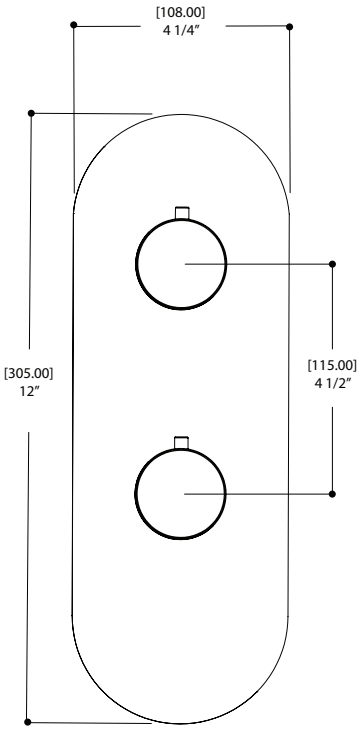

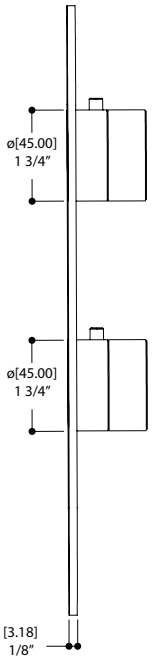

Products and specifications shown are subject to change without notice. Please contact our technical support at tech@aquabrass.com for any further queries, replacement parts requests etc.

AQUABRASS

PLSC77774PC

Round wall and ceiling shower arm set

4" round ceiling drop

16" round shower arm & flange

FEATURES

Solid brass construction
Wallmount/ceiling installation
1/2" NPT female connection

FINISHES

Standard
Polished chrome (pc)
Brushed nickel (bn)

WARRANTY

Residential:Limited lifetime warranty to original purchaser
Commercial: Two years warranty
(Complete warranty available at www.aquabrass.com/warranty)

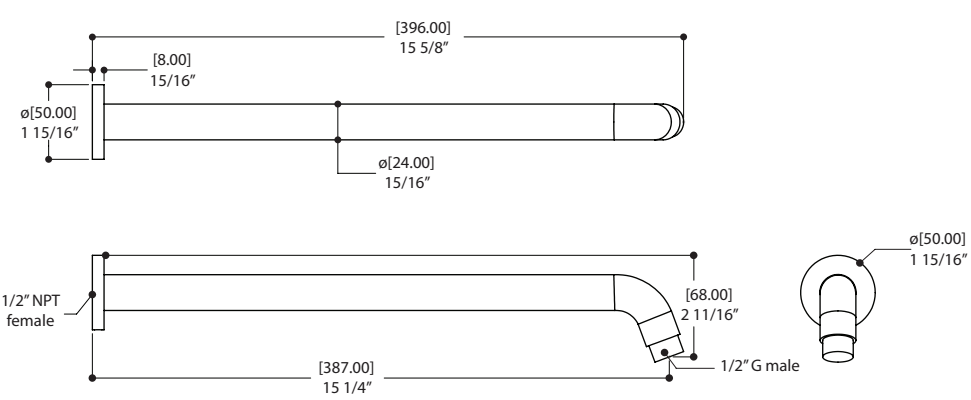

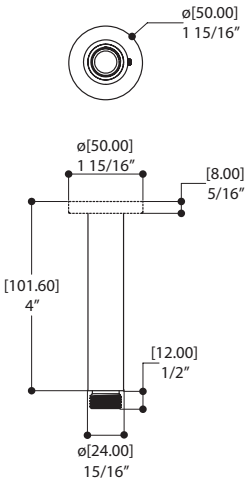

Products and specifications shown are subject to change without notice. Please contact our technical support at tech@aquabrass.com for any further queries, replacement parts requests etc.

AQUABRASS

rainhead 2514

8" round

FEATURES

Contemporary style
Solid brass construction
Silicone spray nozzles for easy cleaning
1/2" NPT female connection

Flow rate: 2.5 gpm

FINISHES

Standard
Polished chrome (pc)
Brushed nickel (bn)
Custom
15 custom finishes available
(ask your local Aquabrass authorized dealer for details)

WARRANTY

Residential: Limited lifetime warranty to original purchaser
Commercial: Two years warranty
(Complete warranty available at www.aquabrass.com/warranty)

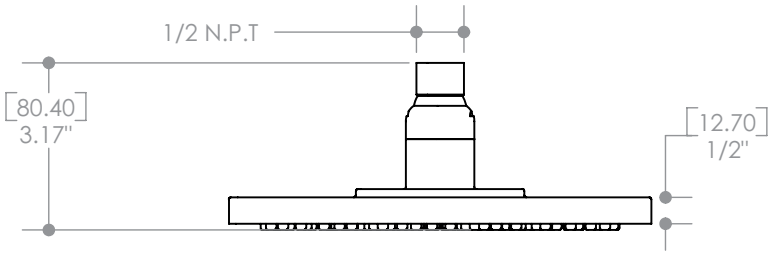

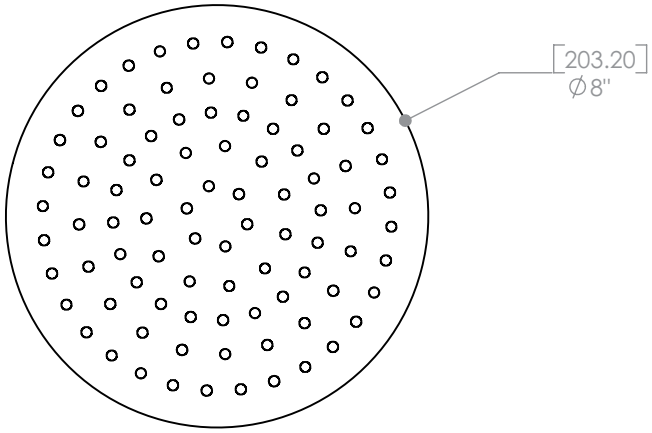

Products and specifications shown are subject to change without notice. Please contact our technical support at tech@aquabrass.com for any further queries, replacement parts requests etc.

aquabrass

handshower 85373

round

FEATURES

1 function: rain
Silicone spray nozzles for easy cleaning
1/2" male connection
Includes back flow preventer

flow rate: 2.5 gpm

FINISHES

Standard
Polished chrome (pc)
Brushed nickel (bn)

WARRANTY

Residential: Limited lifetime warranty to original purchaser
Commercial: Two years warranty
(Complete warranty available at www.aquabrass.com/warranty)

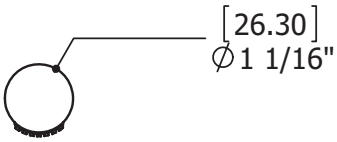

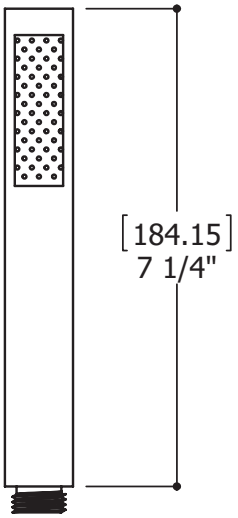

Products and specifications shown are subject to change without notice. Please contact our technical support at tech@aquabrass.com for any further queries, replacement parts requests etc.

AQUABRASS

hose 135

5′ to 6′

FEATURES

Double interlock 5′ to 6′ spiral hose
Extensible
ANTI TWIST (one end with ball-bearing)
1/2″ connections

FINISHES

Standard
Polished chrome (pc)
Brushed nickel (bn)
Custom
15 Custom finishes available
(ask your local Aquabrass authorized dealer for details)

WARRANTY

Residential: Limited lifetime warranty to original purchaser
Commercial: Two years warranty
(Complete warranty available at www.aquabrass.com/warranty)

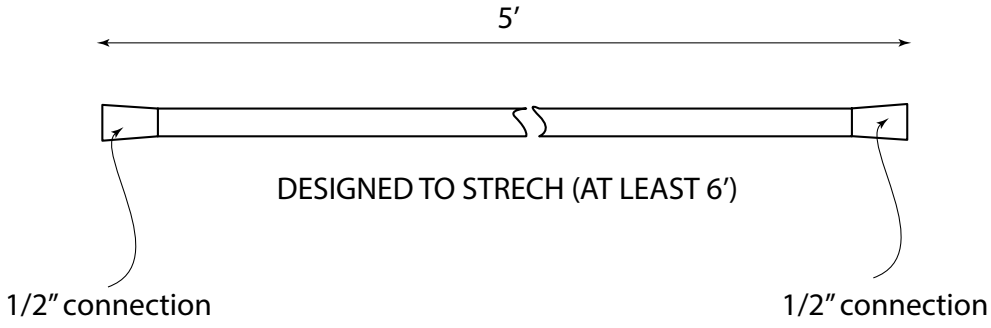

Products and specifications shown are subject to change without notice. Please contact our technical support at tech@aquabrass.com for any further queries, replacement parts requests etc.

aquabrass

waterway with hook 1417

round

FEATURES

Solid brass construction
1/2" NPT female connection

FINISHES

Standard
Polished chrome (pc)
Brushed nickel (bn)
Custom
19 Custom finishes available
(ask your local Aquabrass authorized dealer for details)

WARRANTY

Residential: Residential: Limited lifetime warranty to original purchaser
commercial: Two years warranty
(Complete warranty available at www.aquabrass.com/warranty)

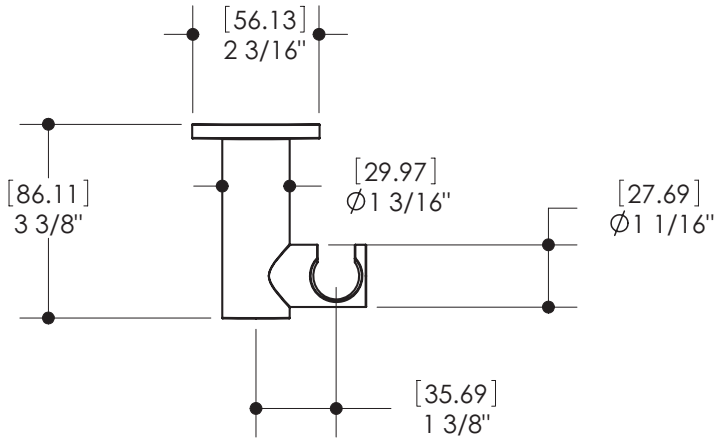

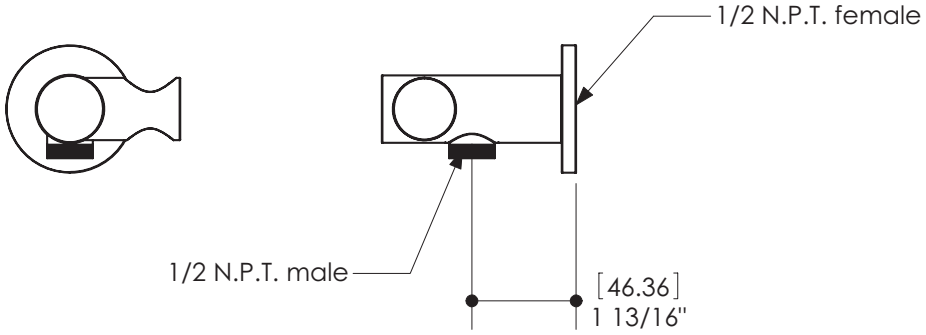

Products and specifications shown are subject to change without notice. Please contact our technical support at tech@aquabrass.com for any further queries, replacement parts requests etc.