aquabrass

bridge 33018

4-piece deckmount tub filler with handshower

robinet de bain 4 morceaux avec douchette

Installation Guide

Guide d'installation

aquabrass

bridge 33018

4-piece deckmount tub filler with handshower

robinet de bain 4 morceaux avec douchette

General Dimensions / Dimensions générales

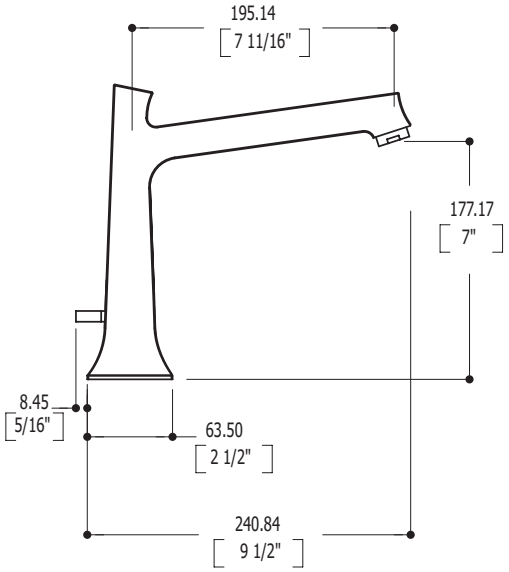

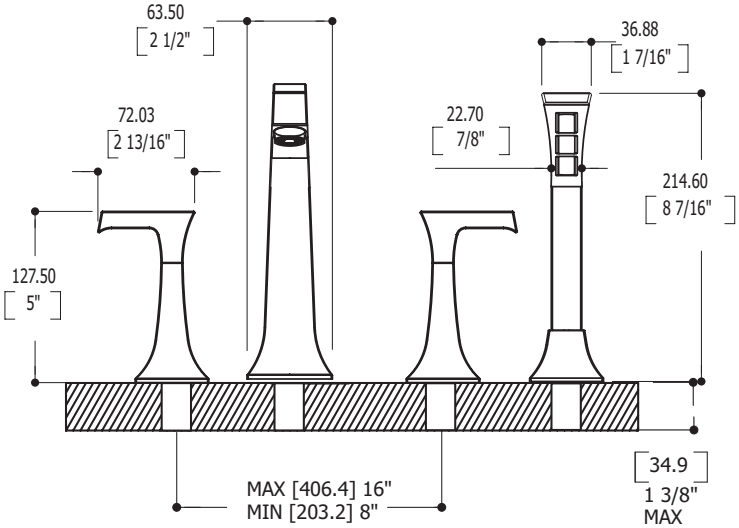

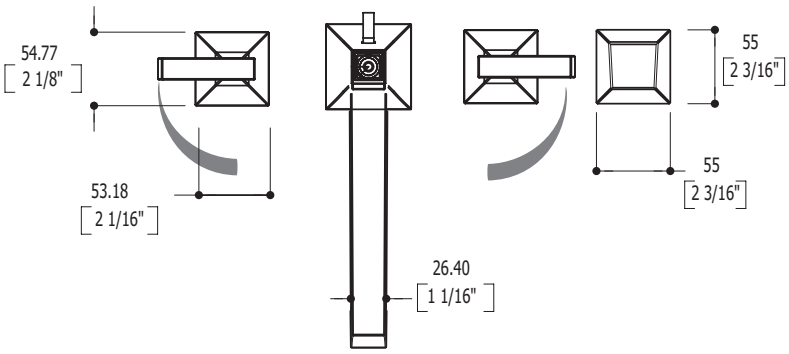

CAUTION: FOR BEST RESULTS, WE STRONGLY RECOMMEND THE INSTALLATION OF THIS FAUCET BE DONE BY A LICENSED PROFESSIONAL PLUMBER.

MISE EN GARDE : POUR OBTENIR UN RÉSULTAT OPTIMAL, NOUS RECOMMANDONS FORTEMENT QUE L'INSTALLATION DE CE ROBINET SOIT FAITE PAR UN PLOMBIER PROFESSIONNEL ACCRÉDITÉ.

CAUTION: MAKE SURE TO PROPERLY FLUSH THE HOT AND COLD WATER SUPPLY LINES PRIOR TO STARTING INSTALLATION.

MISE EN GARDE : ASSUREZ-VOUS DE BIEN PURGER L'ALIMENTATION EN EAU CHAUDE & FROIDE AVANT DE COMMENCER L'INSTALLATION.

aquabrass

bridge 33018

4-piece deckmount tub filler with handshower

robinet de bain 4 morceaux avec douchette

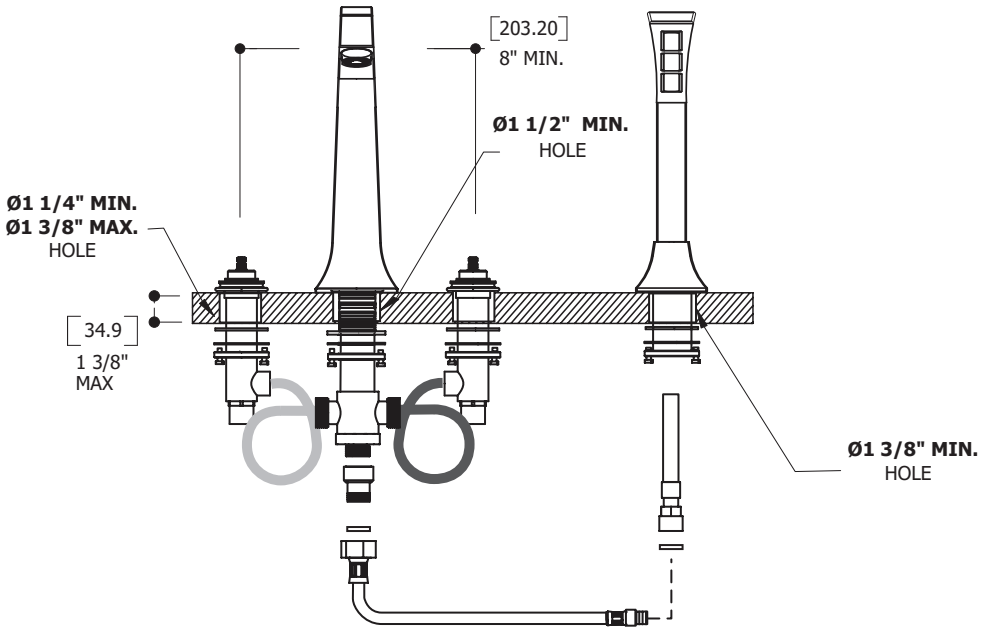

ATTENTION: MAKE SURE TO FLUSH THE HOT AND COLD WATER SUPPLY LINES BEFORE BEGINNING THE INSTALLATION.

1 INSTALLING THE SPOUT

A. First of all, make sure you have four holes in your deck installation.**AND FOR THE FUTURE MAINTENANCE, KEEP ALWAYS AN AVAILABLE ACCESS TRAP**

B. Remove the aerator (25).

C. At the bottom of the threaded tie down tube, unscrew the hexagonal nut (12) and take off the **T** connection.

D. Make sure that the large O ring (7) is well inserted in the groove under the flange. Mount the spout (2) into one of the center deck holes.

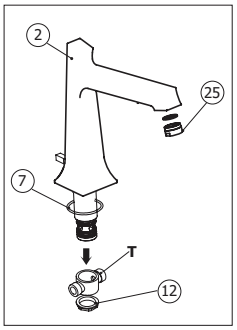

E. From under the tub, mount the rubber washer (8) and then the metal washer (9) on the threaded tie down tube (6) and thread all those with the tight fitting nut (10). Secure firmly the spout with the both added screws (11). Position the spout (2) directly perpendicular to the bath and mount so that it clears the tub rim properly.

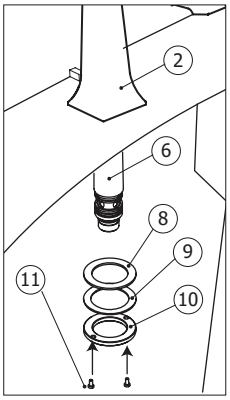

F. Reinstall the **T** connection under the spout .Screw on the hexagonal nut (12). Tighten well.

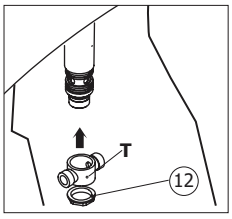

aquabrass

bridge 33018

4-piece deckmount tub filler with handshower

robinet de bain 4 morceaux avec douchette

2 PREPARING THE HOT AND COLD VALVES

A. Each faucet is supplied with a hot and cold valve. Make sure you mount hot (15) on the LH and cold (19) on the RH when facing the basin front.

B.Mount the two screws (20) into the brass nut (18) threading them in level with the nut.

C. Then take the brass nut (18) and thread halfway down on the valves (15) (19) with the set screws (20) pointing down. Now slide the metal washer (17) and black foam washer (16) onto the valve.

D. Valves are ready for mouting

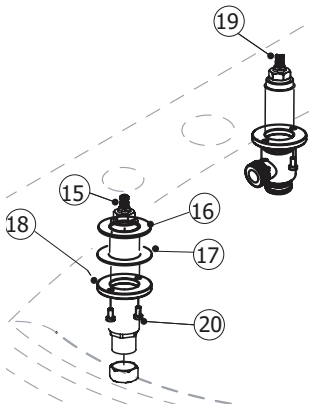

3 PREPARING THE HANDLES FOR MOUNTING

A. Take the brass insert nut (22) and mount the "O" ring (23) into the bottom

B. Now thread both insert nuts (22) into the bottom of each handle escutcheon (13). Make sure you thread it in flush with the bottom of the escutcheon and that the "O"ring is at the bottom.

C. Now mount "O"ring (24) into the bottom of each escutcheon.

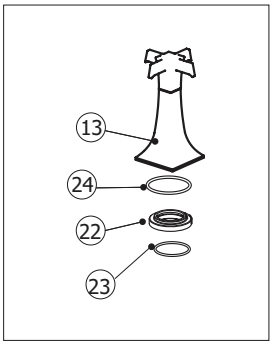

4 MOUNTING THE HOT/COLD VALVE

A. Push your valve through the hole underneath of the basin and make sure it comes up enough to thread on the escutcheon.

B. Thread the escutcheon (13) with handle onto the valve (15)(19) until it bottoms out.

C. Now allow the escutcheon and handle to sit flush on your sink top

D. Adjust the handle and the **square** escutcheon to line up with your **square** spout base. At the same time, make sure your handle lines up properly with you basin.

E. Now from underneath start to tighten up the brass nut (18) with screws (20) until it is firmly in place.

F. Make sure the movement of the handle is smooth and that the handle and bell are lined up properly with the spout and basin. Make sure the on/off movement is ok before you tighten the two screws (20) on the brass nut (18)

G. Now tighten firmly the the two screws (20)

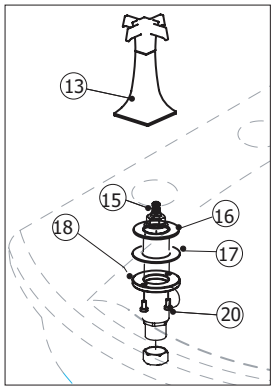

5 MOUNTING THE HAND SHOWER

A. Insert the flange and his threaded tube (33) through the outside hole of the deck (L or R). From the bottom, mount the rubber washer (34) and then the metal washer (35) on the threaded tie down tube and thread all those with the tight fitting nut (36). Secure firmly the spout with the both added screws (37).

B. Now put together the chrome flexible hose (32) and the hand shower (30). Tighten firmly.

C. Now slide the flexible hose with hand shower attached through the top of the holder.

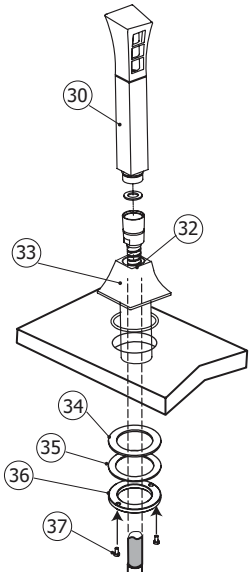

6 FLEXIBLE HOSES

A. Insert the rubber washers in the1/2" female and 3/4 " female nuts at the end of the flexible hoses.

B. Connect the flexible hoses (60) to the hot (15) and cold 1/2 " valve (19) and the 3/4" end to the **T** section. Secure firmly without twisting the hoses.

C. Before connecting the extension hose to the hand shower(30),mount the check valve (61) onto the bottom of the deck spout. Note that the female end of the check valve has the washer factory sealed in place already. Tighten firmly. Now take the extension hose (63) and mount the 3/8"male end of the hose into the female end of the chrome deck hose (32) sealing this with rubber washer. Tighten firmly. Finally mount the female end of the extension hose (63) with rubber washer(62) onto the male end of the check valve (61). Tighten firmly.

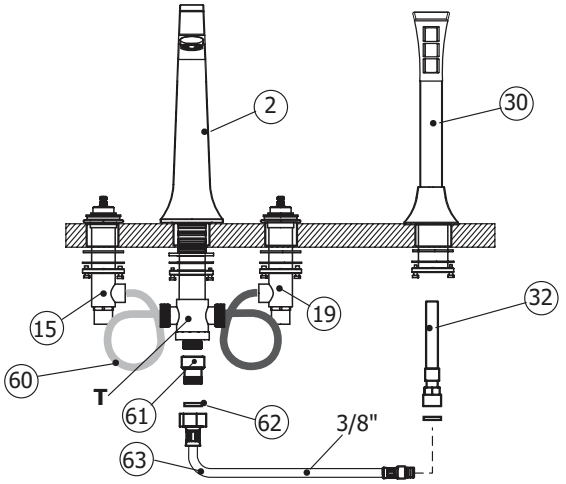

7 AFTER WATER CONNECTION

A. Installer must supply hot and cold water supply connections to the valves.

B. When the connections are made , turn on both your hot and cold valves. Check all joints for leaks. Tighten as needed.

C. Flush out both lines again before you thread your aerator (20) back into the spout.

D. Turn on your hot and cold valves and with the water now running from the spout (2), pull up on the diverter (1) to verify that the water is now diverted properly to the hand shower. Now turn off the hot and cold valves and the spring loaded diverter will return back to spout.
Only use the diverter to divert from the spout to the hand shower. Do not divert back and forth with the water running. Use only as instructed.

aquabrass

bridge 33018

4-piece deckmount tub filler with handshower

robinet de bain 4 morceaux avec douchette

Care
Entretien

To clean your Aquabrass faucet or accessory, wash with a wet nonabrasive soapy cloth. Then wipe dry with a soft towel or cloth. We recommend this be done on a regular basis.

DO NOT USE ANY ABRASIVE, CHEMICAL OR CORROSIVE, POWDER OR ANY OTHER STRONG CLEANERS INCLUDING DETERGENTS, WINDOW CLEANERS AND DISINFECTANTS ON YOUR Aquabrass PRODUCT as they will destroy the finish and therefore VOID THE WARRANTY.

Toothpaste remnants should also be rinsed off when necessary. Ask your plumbing retailer about our PROTECTANT-CLEANER now available from Aquabrass. This product is specially manufactured to clean and polish leaving a protective coating to maintain your product's shine and finish.

Pour nettoyer et conserver l'apparence de vos robinets ou accesoires Aquabrass, lavez-les avec un linge mouillé à l'eau tiède et enduit d'un savon doux non-abrasif. Puis essuyer avec un linge doux et sec. Nous vous recommandons cet entretien sur une base régulière.

NE JAMAIS UTILISER DE PRODUITS ABRASIFS, CHIMIQUES, CORROSIFS, INCLUANT DE TRÈS FORTS DÉTERGENTS, EN LIQUIDE OU EN POUDRE, NETTOYANTS POUR VITRES ET DÉSINFECTANTS sur votre produit Aquabrass. Cela pourrait en détériorer le fni et ANNULER LA GARANTIE.

Les restants de pâte dentifrice doivent aussi être rincés au besoin. Demander à votre détaillant le PROTECTEUR NETTOYANT Aquabrass spécialement conçu pour nettoyer, faire briller et protéger en laissant un mince lm protecteur sur vos robinets et vos articles décoratifs.

aquabrass

bridge 33018

4-piece deckmount tub filler with handshower

robinet de bain 4 morceaux avec douchette

Limited lifetime warranty

All Aquabrass products carry a full warranty against defects in materials and workmanship. The warranty will be applied only if the product is purchased from an authorized Aquabrass dealer. The Aquabrass warranty is limited strictly to the original consumer purchaser of the product. Proof of purchase must be made available to Aquabrass for all limited warranty claims. Products that are deemed defective must be returned to our factory for inspection prior to replacement.

The limited warranty is not transferable and is limited to products sold and installed in Canada and the United States.

Residential applications

Mechanical working parts including ceramic disc cartridges for both side valves and pressure balance, thermo cartridges, stops, diverters etc.

All carry our full limited lifetime warranty to the original purchaser.

Aquabrass polished chrome and brushed nickel finishes are warranted for the life of the product to the original purchaser.

All other finishes will be warranted for five years.

Normal wear of the finish is not covered by this warranty.

All electronic components and faucets are warranted for two years.

All glass and ceramic basins, light fixtures are warranted for one year. Stone resin bathtubs and sinks are warranted for five years. Light bulbs are subject to the warranty of the manufacturer and carry no Aquabrass warranty.

All other Aquabrass products are warranted for five years.

Commercial industrial applications

All the above product applications will be warranted for two years with the exception of the glass and ceramic basins, light fixtures which will carry a one year warranty. Light bulbs are subject to the warranty of the manufacturer and carry no Aquabrass warranty.

The Aquabrass warranty does not cover the following:

- Damages resulting in whole or part from installation error, product abuse, misuse, neglect, improper maintenance, abrasives, corrosion and/or accidents whether caused or performed by a professional or anyone else.
- Any and all Aquabrass products that are subjected to any type of harsh abrasive, such as detergents or window cleaners.
- Normal wear of the finish.
- The damage is caused by hard water, calcareous deposits or sediments.
- The damage or loss is sustained in a natural calamity such as fire, earthquake, flood, thunder, electrical storm, etc.

Aquabrass is not responsible for any labor or shipping charges, or damages whatsoever incurred in whole or in part from installation, removal, re-installation, repair or replacement of any Aquabrass product or part, as well as any incidental or consequential damages, expenses, losses, direct or indirect, arising from any cause whatsoever.

To obtain warranty service, please contact the retailer where the product was purchased. The orginal sales receipt must be available to exercise our warranty.

This warranty is extended to the first purchaser at retail. This warranty is NOT transferrable.

Aquabrass reserves the right to make product specification changes without notice or obligation and to change or discontinue certains models.

Garantie limitée à vie

Les produits Aquabrass ont une garantie complète contre les défauts de matériel et de main d'œuvre. La garantie est applicable seulement si le produit est acheté chez un détaillant aquabass dûment autorisé. La garantie Aquabrass est strictement limitée au premier acheteur et une preuve d'achat doit être présentée pour toutes réclamations. Les produits considérés comme défectueux doivent être retournés à nos entrepôts pour inspection avant tout remplacement.

La garantie Aquabrass n'est pas transférable et est limitée aux produits vendus et installés au Canada et aux Etats-Unis.

Applications résidentielles

Toutes les parties mécaniques incluant les cartouches à disques en céramique pour les valves et les pressions équilibrées, les cartouches thermostatiques, les déviateurs ont une garantie complète au premier acheteur.

Les finis Chrome Poli et Nickel Brossé de Aquabrass ont une garantie à vie limitée au premier acheteur. Tous les autres finis ont une garantie de cinq (5) ans. L'usure normale d'un fini n'est pas couverte par la garantie.

Toutes les composantes et les robinets électroniques ont une garantie de deux (2) ans.

Tous les bassins en verre, les bassins en porcelaine, les lumières ont une garantie de un (1) an. Les bains et lavabos en composite de résine ont une garantie de cinq (5) ans. Les ampoules sont sujettes à la garantie du manufacturier et ne sont pas couvertes par la garantie Aquabrass.

Tous les autres produits ont une garantie de cinq (5) ans.

Applications commerciales et industrielles

Tous les produits ci-dessus sont garantis pour deux (2) ans à l'exception des bassins en verre ou porcelaine qui sont garantis un (1) an. Les ampoules sont sujettes à la garantie du manufacturier et ne sont pas couvertes par la garantie Aquabrass.

La garantie Aquabrass ne couvre pas:

- Dommages causés en entier ou en partie d'une erreur d'installation, d'abus de produit, de négligence, d'utilisation non con forme, d'usage de produits abrasifs, de corrosion et/ou d'accidents causés par un professionnel ou par toute autre personne.
- Tout produit Aquabrass nettoyé avec des produits abrasifs, comme les détergents ou les nettoyants à vitres.
- Usure normale du fini.
- Dommages causés par l'eau dure, les dépôts de calcaire ou les sédiments.
- Les dommages ou les pertes résultant d'une catastrophe naturelle telle qu'un feu, un tremblement de terre, le tonnerre, un orage électrique etc.…

Aquabrass n'accepte aucune responsabilité pour tous frais de main d'œuvre ou d'expédition, ou pour tous autres dommages causés en tout ou en partie lors de l'installation du produit, son enlèvement, sa réinstallation, sa réparation, ou le remplacement de tout produit ou pièce Aquabrass ainsi que tout dommage incident ou résultant, dépense, perte directe ou indirecte, provenant de quelque cause que ce soit.

Pour obtenir la garantie de service, s'il vous plaît contacter le détaillant chez qui le produit a été acheté. La preuve d'achat originale sera exigible pour l'application de la garantie.

Cette garantie s'applique au premier acheteur au détail et n'est PAS transférable.

Aquabrass se réserve le droit de modifier des caractéristiques de ses produits sans avis ni obligation ainsi que de remplacer ou de retirer certains modèles.

aquabrass