aquabrass

stringG 17735

1/2" thermostatic shower column

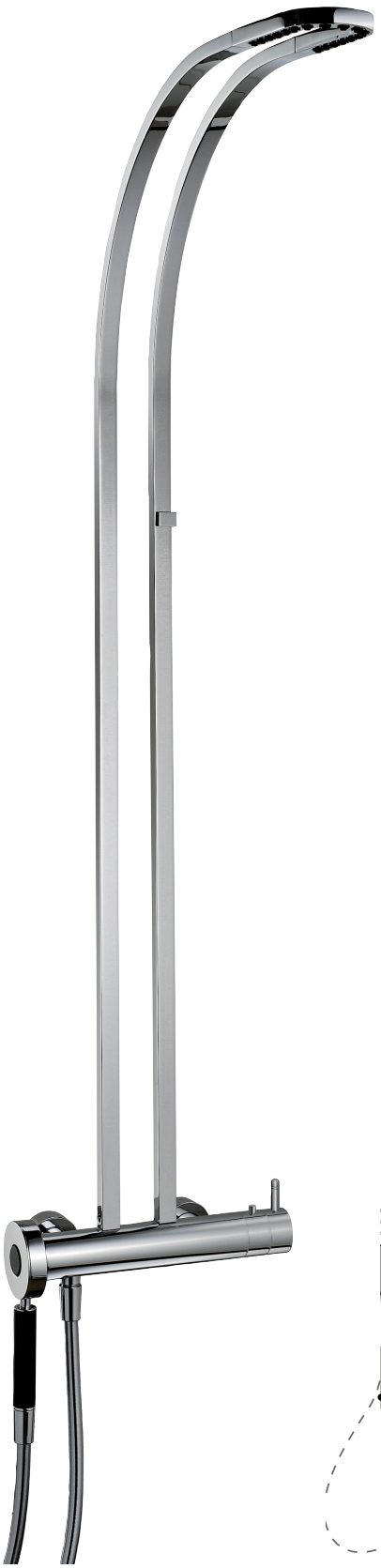

FEATURES

Solid brass construction
1/2" thermostatic valve with 2-way diverter
Curtain rain
Single function handshower
5' reinforced pvc hose
1/2" NPT male connection

Flow rate:	curtain rain	3.5 gpm
	handshower	2.5 gpm

FINISHES

Standard
Polished chrome (PC)

WARRANTY

Residential: Limited lifetime warranty to original purchaser
Commercial: Two years warranty
(Complete warranty available at www.aquabrass.com/warranty)

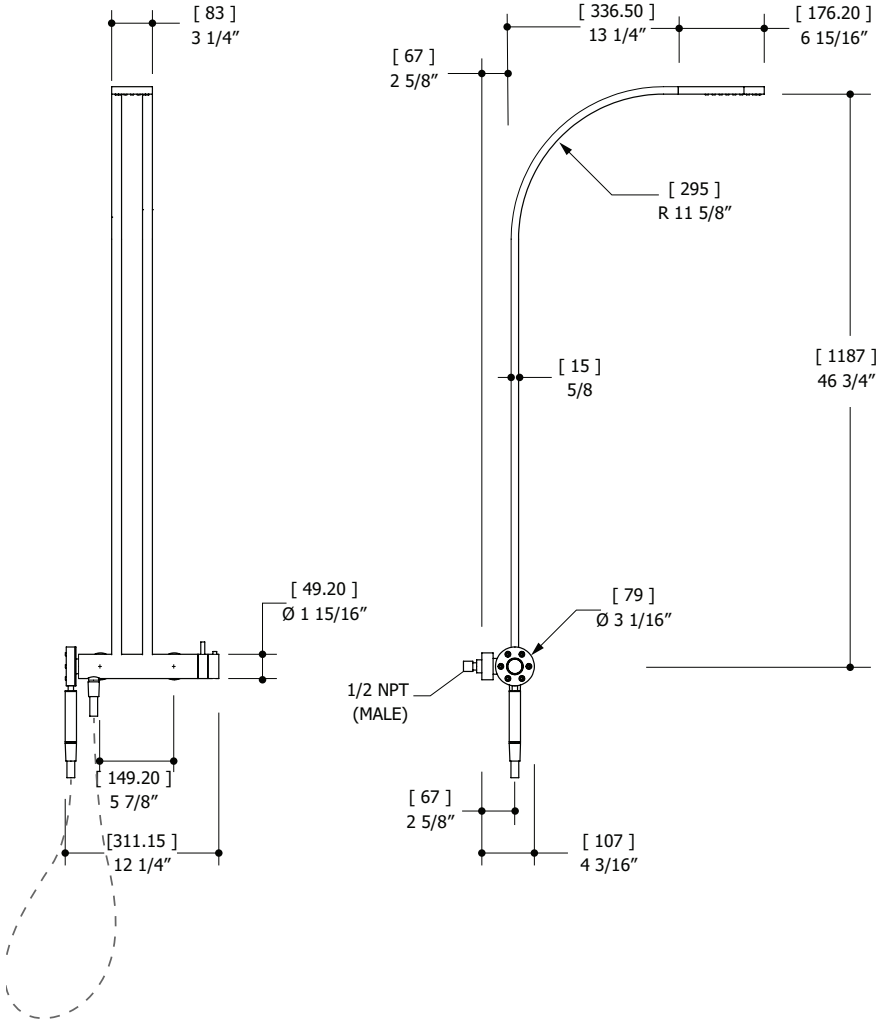

Products and specifications shown are subject to change without notice. Please contact our technical support at tech@aquabrass.com for any further queries, replacement parts requests etc.